ƒ ‹ F | Œfia‹ ˙'e›ß• |–M^D‹ ª¤s›p e ·`⁄⁄¶i« ‡ł§i

g‟ ˜ · ¯Ø‟ ›–, g‡ ¤ ¸⁄ ˘„q.. †M.. ⁄ ¸»EƒX⁄ ˇ ‡⁄§ ' ªƒX‹ ª

¤s(1/3)

›p e^ §¡G §O«‹ ›p e

›p e‰ ¸s„¡GNSC93-2314-B-038-038-

ıƒ ·`¶¡¡G93 ƒ~08 ⁄ ° 01 ⁄ ƒ 94 ƒ~07 ⁄ ° 31 ⁄Ø

ıƒ ‡ ƒ ¡G» O ¥´ ˙⁄j ˙⁄ œ ˙¤t

›p e¥ D œ⁄¡HG§ ı ‡ · ›

ƒ ƒP¥ D œ⁄¡HG… fl ¤ } A‹ I¥^ –

‡ł§i^ «‹¡G” ° †‡ł§i

‡ł§i‟ ¥ ¡G¥ Xu Œ» • |˜‡‹ ª¤s⁄ –o‡ł§i⁄ ¸ o‟ ‰ ⁄

‡ B † zŁ¡fG¡¥»›p e¥ i ⁄ ‰ ¶‹ d,

⁄⁄ ¥` Œ 94 ƒ~5 ⁄ ° 31 ⁄Ø

The osseointegration study of optimizing plasma cleaning and polymerization processes on titanium implant surfaces(1/3)

NSC93-2314-B-038-038

94 7 31

Abstract

Since the first dental implant was placed, implantologists have been attempting to understand the implant/bone integration mechanisms. By medication of the surface morphology, a mechanical interlock between the implant and the surrounding bone bed could be achieved. But closer examination of the interface demonstrated that fibrous connective tissue intervened between the material and the bone. In order to improve implant/bone integration, it is desirable to control interfacial reactions such that nonspecific adsorption of proteins is minimized and tissue-healing phenomena can be controlled. In order to improve and control the integration between implant and tissue, and to reduce the adsorption of non-specific proteins, cold plasma treatments have been used in recent years to activate the titanium surface to graft specific proteins. However, the optimal status of plasma treatments has not been discussed in many studies. The purpose of this study is to use experimental design to find the optimal condition in cold plasma treatment and to develop a new method to functionalize titanium surfaces by plasma treatment, so that tissue can be healing as soon as possible. Plasma treatment was performed to cleaning surface and polymerization to linking a functional group on plasma-treated titanium surface. The covalent immobilization of bioactive organic molecules and in vitro bioactivity were evaluated by x-ray diffraction (XRD), atomic force spectroscopy (AFM), x-ray photoelectron spectroscopy (XPS), scanning electron microscopy (SEM), and MTT assay. Based on the above investigation, it is obvious oxygen

species were implanted in plasma cleaning. It revealed that oxygen, existed in process chamber, reacted with titanium plates during cleaning process. According to the contact angle observation, in the argon plasma and allylamine plasma design which Model F-value of 8.00 and 7.33 implies the model is significant. There is only a 0.16% and 0.34% chance that a "Model F-Value" this large could occur due to noise. Water contact angle values of the plasma modified surfaces varied between 21.67 degrees and 62.95 degrees, demonstrating a decrease as the applied plasma power was increased. But the amounts of amino functional groups deposition were reduced when the applied pressure increasing.

Key word: titanium, glow discharge, collagen, response surface methodology

Introduction

Implantable biomaterials are designed to replace a portion of associated functions. Generally, only the surface of an implant directly contacts the host tissue, and thus this portion of the biomaterial is critical in determining biocompatibility. Thus, improving the surface-modified technique of implants to enhance the interface healing between the implant with bone is always the key point of researches in the development of dental implant. 1969, Dr. Brånemark 's team designed an optical chamber housed in a titanium metal cylinder, which was screwed into the rabbit's thighbone. Once the experiment was completed after several months, they realized that the titanium cylinder had fused to the bone. He named this phenomenon Osseointegration.[1]

1981, Albrektsson pointed out that titanium screws were implanted without the use of cement, using a meticulous technique aiming at osseointegration a direct contact between living bone and implant. The pattern of the anchorage of collagen filaments to titanium appeared to be similar to that of Sharpey's fibres to bone. An intact bone-implant interface was analyzed by TEM, revealing a direct bone-to-implant interface contact also at the electron microscopic level, thereby suggesting the possibility of a direct chemical bonding between bone and titanium.[2]

1983, Linder performed the thereunder report. Ten cylindrical implants, made of polycarbonate and covered with a 120-250-nm-thick layer of pure titanium, were implanted into each tibial metaphysis of five rabbits. With TEM microscopy the titanium was shown to be bordered by a 20-nm-thick layer of proteoglycans, showing the characteristics of ground substance, and separating the collagen from the implant surface. Cells at the interface were likewise separated from the titanium by such a layer.[3]

Amelogenins were visualized using an antibody and an mRNA probe prepared against the major alternatively spliced isoform in rodents, and nonamelogenins by antibodies and mRNA probes specific to one enamel protein referred to by three names: ameloblastin, amelin, and sheathlin. Qualitative and quantitative immunocytochemistry, in combination with immunoblotting and in situ hybridization, indicated a correlation between mRNA signal and

sites of protein secretion for amelogenin, but not for ameloblastin, during the early presecretory and mid- to late maturation stages, during which mRNA signals were detected but no proteins appeared to be secreted.[4]

Although "biocompatible" polymeric elastomers are generally nontoxic, nonimmunogenic, and chemically inert, implants made of these materials may trigger acute and chronic inflammatory responses. Material preincubated with albumin is "passivated," accumulating very few adherent neutrophils or macrophages, whereas uncoated or plasma-coated PET attracts large numbers of phagocytes. Neither IgG adsorption nor surface complement activation is necessary for this acute inflammation; phagocyte accumulation on uncoated implants is normal in hypogammaglobulinemic mice and in severely hypocomplementemic mice. Spontaneous adsorption of fibrinogen appears to initiate the acute inflammatory response to an implanted polymer, suggesting an interesting nexus between two major iatrogenic effects of biomaterials: clotting and inflammation. Adsorption of albumin (HSA) and fibrinogen (Fib) from human blood plasma onto titanium surfaces with varying oxide properties was studied with an enzyme-linked immunosorbent assay. Low Fib and high HSA adsorption was observed for all titanium samples except for the radio frequency plasma-treated and water-incubated samples, which adsorbed significantly lower amounts of both. Oxide thickness and carbon contamination showed no influence on protein adsorption or contact activation. Smooth samples with a surface roughness (Rrms) < 1 nm showed some correlation between surface wettability and adsorption of Fib and HSA, whereas rough surfaces (Rrms > 5 nm) did not. To varying degrees, all titanium surfaces indicated activation of the intrinsic pathway of coagulation as determined by their kallikrein formation in plasma.[5-6]

Recent advances in cell isolation and culture procedures, combined with growing understanding and use of molecular biology and biochemistry techniques, have resulted in the establishment of a new field of biological/biomedical research: cellular and tissue engineering. In vitro investigations utilizing osteoblasts, osteoclasts, and appropriate precursor cells, combined with long-term (i.e., years) tissue engineering studies in vivo are needed to enhance current understanding of the many mechanisms involved in bone formation and regulation. Such understanding will allow the development of proactive biomaterials for use in bone, which can elicit specific, timely, and clinically desirable responses from surrounding cells and tissues.[7]

The surface of poly(methyl methacrylate) membrane was partially hydrolysed and the carboxyl groups produced were coupled with various protein molecules with water-soluble carbodiimide. The immobilized proteins were a cell-growth factor insulin, cell adhesion factors fibrinogen and fibronectin, and serum proteins albumin and gamma-globulin. The insulin-immobilized poly(methyl methacrylate) membrane strongly accelerated the growth and slightly accelerated the adhesion of fibroblast cells. The immobilized fibronectin and fibrinogen enhanced the cell adhesion, and the former also accelerated the cell growth. The

immobilized albumin and gamma-globulin influenced the adhesion and growth of cells very little. It was found that various proteins specifically influence the adhesion and growth of cells in an immobilized state.

A cell growth factor protein (insulin) and/or a cell-adhesion protein (fibronectin) were immobilized on surface-hydrolyzed poly(methyl methacrylate) membranes. The growth of mouse fibroblast cells STO was accelerated by the immobilized insulin. This acceleration was enhanced by introduction of spacer arms. Coimmobilization of insulin and fibronectin was very effective for the acceleration of cell growth.Insulin, transferrin and collagen were immobilized on the surface of hydrolysed poly(methyl methacrylate) films. Mouse STO fibroblasts were cultured on the protein-immobilized films. Growth factors remained immobilized without detachment and accelerated cell growth in a more potent manner than free or adsorbed growth factors. Immobilized collagen enhanced the flattening of adhered cells in the early stages of cell adhesion, but did not enhance cell growth significantly.The proteins were coupled to the amino groups on the surfaces by using dimethyl suberimidate (DMS) or water-soluble carbodiimide (WSC). The cell growth was higher on immobilized insulin or transferrin than on free insulin or transferrin, respectively. Though immobilized collagen did not affect the cell growth, coimmobilization with insulin or transferrin brought about greater acceleration of cell growth. In addition, the immobilized collagen was indispensible to maintain the endothelial cells on the material surface for a long time.[8-11]

As the base polymer for immobilization reaction, poly(ether urethane urea) (PEUU), which was reported to have good blood compatibility, was used. hTM-immobilized PEUU showed superior antithrombogenic activity, such as the prolongation of plasma recalcification time and the inhibition of thrombin-induced platelet aggregation, though the amount of immobilized hTM was very small (i.e. less than 1 microgram/cm2). Platelet adhesions onto hTM-immobilized PEUU were not observed. These results show that the immobilization of hTM does not change the native good blood compatibility of PEUU, but provides excellent anticoagulant activity. Thrombomodulin (TM) is a newly described endothelial cell associated protein that functions as a potent natural anticoagulant by converting thrombin from a procoagulant protease to an anticoagulant.[12-13]

Heparin was coupled via its carboxyl group with a polyacrylamide derivative containing covalently bound amino groups using the carbodiimide reaction. Heparin immobilized in this way proved to be useful as an affinity carrier for the isolation of antithrombin III and heparin-binding proteins from boar seminal plasma.[14]

New medical products, materials and surgical procedures keep improving current health-care practices. Many of these innovations involve polymeric devices that must meet certain clinical and cost requirements. Chief among these pressures is the need for biocompatibility between the physiological environment and the biomaterial surface. Plasma surface modification can improve biocompatibility and biofunctionality. This article reviews the capabilities and applications of the technology.[15]

These techniques are also currently undergoing scrutiny in biomaterials research, where they are widely used for modifying polymer surfaces and producing thin polymer coatings (plasma polymerization).[16] Baier and DePalma also noted the potential of glow discharge plasma treatments for sterilizing implants.[17] Therefore, surface modification to improve the performance of biomaterials by depositing plasma-polymerized thin films is a critical and important technique. Although plasma techniques have been widely applied in biomaterial research, information regarding mechanisms for surface cleaning and modifying biomaterials remains scarce. this study examines the use of surface modification to enhance the biomaterial performance via the deposition of plasma-polymerized thin films. Plasma-polymerized films were achieved using allylamine, a monomer that has been demonstrated to provide surfaces rich in amino groups. Properties of plasma-treated titanium plates were evaluated by using XPS, SEM, TEM, AFM, GIXRD and cell culture.

II. Experimental Procedures

The grade II titanium substrates used in these experiments were 2-mm-thick plates with diameter 1 cm and 99.7% purity. The titanium plates were polished using 600-grit SiC metallographic paper. Following polishing, specimens were solvent-cleaned in methylethylketone for 5 min, washed in distilled water for 20 min, acid pacified in 30% nitric acid for 30 min according to the American Standard Testing Materials (ASTM) procedure and rinsed again in ultrapure water for 20 min. Before coating via allylamine plasma deposition, the samples were subjected to argon-plasma treatment in the same reactor. Optimal operating conditions of allylamine plasma deposition were investigated by using the factorial design and responses surface methodology (RSM). The argon-plasma cleaning was performed at several discharge power (60, 80, 100, 120 and 140 W) and an argon flow rate of 20 sccm. The plasma treatment time was at five different periods (2, 5, 10, 15 and 20 min), and the working pressure was set in serial value(100, 135, 170, 205 and 240 mTorr). The plasma-treated parameters such as RF power, working pressure, and plasma cleaning time were list in table 1. The Ar plasma cleaning was immediately followed by different pulse-plasma polymerized plasma treatments onto titanium substrate, using 5% Allylamine as the process reagent. The pulse-plasma polymerized samples were transferred under exposure to ambient air to the analysis equipment without further treatment. The pulse-plasma polymerized parameters such as RF power, working pressure, and plasma deposition time were list in table 2, according responses surface methodology. Treated Ti plates were immersed in a 1% glutaraldehyde solution in 0.1 M phosphate buffer (pH adjusted to 7.0 with NaOH) for 4 h at 25 °C and rinsed with phosphate buffer. The plates were then soaked overnight in solutions containing type ¢„ collagen dissolved in phosphate buffer.

To analyze the properties of plasma-treated and amino-coating titanium plates, the surface morphologies of the treated titanium plates were analyzed using a Nanoscope III D5000 atomic force microscope (AFM) with a Si probe. The x-ray power was 250 W (15 kV

at 16.7 mA). Moreover, the XPS energy scale was calibrated by setting the binding energy of the Ag 3d5/2 line of clean silver to precisely 368.3 eV, as referenced to the Femi level. The angle of incidence of the x-ray beam to the specimen normal was 45o. High-resolution scans were performed for Ti, C, O, and N using an x-ray beam with approximately a 15-nm diameter.The elemental compositions of surfaces were identified by measuring the energies of Auger electrons with auger electron spectroscopy (AES).

The water contact angles were measured by a sessilendrop method at room temperature using an optical bench-type contact angle goniometer, which incorporated an internal protractor-readout that was calibratedin 1° increments (Model 100-0, Rame-Hart, Inc.). Drops of purified water, 3–l, were deposited onto the film surface to form sessile drops using a micro-syringe attached on the goniometer. Control and plasma-treated grade II titanium samples were incubated with 0.1% TNBS in 3% sodium borate at 70¢J for 5 min, washed with distilled water, then hydrolyzed with 1 n NaOH at 70¢J for 10 min. These reactions produced a yellow color that was proportional to the number of trinitrophenyl groups and, therefore, proportional to the number of amino groups. The absorbance of the hydrolysate was measured at 410 nm. Standard curves were prepared by direct hydrolysis of TNBS in NaOH.

Furthermore, cell proliferation on the titanium and surface-modified Ti samples was determined following 48 h. At that time, the cells on the samples were gently rinsed with PBS and removed from the growth surface by incubation in 1 mL of a sterile trypsin-EDTA (trypsin-ethylenediamine terta-acetic acid) solution in phosphate-buffered saline (PBS) for 2 min. An aliquot of the cell suspension was then counted with a hemocytometer. Moreover, an osteoblast cell line (MC3T3-E1) was directly seeded onto the the specimen surfaces at a density of 5 x 104 cells/ml. The culture medium was alpha-modified minimum essential medium (α-MEM; Gibco, Grand Island, NY, USA). Cells were cultured for 96 h in α-MEM, supplemented with 10% inactivated fetal calf serum. Cells then were incubated at 37°C in an atmosphere containing 5% CO2, and the medium was changed every 72 h. Subsequently, cells were seeded into 24-well plates at a density of 5 x 104 cells per well in 500 µl of medium. After 48 h during the log phase of growth, the medium was replaced with 500 µl of extracts as control medium. Cells were exposed to the extracts for 24 h, the liquid was aspirated, and 50 µl of 10 mM MTT in PBS, pH 6.75, was added to each well. After incubation for 4 h, the liquid was aspirated, and the formazan reaction product was dissolved in 200 µl dimethyl sulfoxide. Finally, the optical densities were measured using an Anthos 2020 Labtec instrument at 595 nm.

For immunolabeling of collagen type I-coating specimens, treated titanium plates were incubated for 10 min with 0.01 M phosphate-buffered saline (PBS, pH 7.2) containing 1% ovalumine to block nonspecific sticking, and then incubated for 90 min with a rabbit anti-rat albumin antibody (Cappel) at a dilution of 1: 250. Specimens were rinsed in PBS and again briefly exposed to PBS-ovalbumin as described above. The sites of antibody-antigen binding were then identified by incubation with the protein A-gold complex for 30 min. The complex

was prepared as previously described using 8-nm gold particles. The controls were incubated with a non-immune antibody followed by protein A-gold. The samples were rinsed with PBS followed by distilled water, dried, and examined by AFM using the tapping mode for visualizing gold particles on the specimen surface. Additionally, the t-test was applied to test the significance of the observed differences between the percentages of attached cells on the various surfaces. Each statistical test has an associated null hypothesis, and the p-value is the probability that the sample could have been drawn from the population(s) being tested (or that a more improbable sample could be drawn) given the assumption that the null hypothesis is true. A p-value of 0.05 indicates that there is only a 5% probability of drawing the sample being tested if the null hypothesis is actually true.

III. Results and Discussion

A. Properties of Ar plasma-treated titanium plates

Figure 1 shows the AFM analysis results of titanium surfaces after argon plasma cleaning, and the porous surfaces could be found obviously. It reveals that we can perform a porous surface of the titanium disc by argon plasma treatment. This result is like that graded porous titanium coatings have been deposited on titanium substrates for dental implants by plasma spraying in an argon atmosphere.[18]

Figure 2 shows the SIMS analysis results of titanium surfaces, and there was titanium oxide layer deposited on the titanium surface during the argon plasma treatment. With appropriate plasma parameters, argon plasma remove all chemical traces from former treatments (adsorbed contaminants and other impurities, and native oxide layers), in effect producing cleaner and more well-controlled surfaces than with conventional preparation methods.[19] Wettability may be one of the surface factors to be considered when selecting dental implant biomaterials. Contact angles of dental implant surface preparations influence wettability and tissue adhesion.[20] The contact angle of titanium surfaces is not proportional to the setting factors of power, time and pressure in Argon plasma cleaning, showing in figure 3. The surfaces with lower contact angle can be obtained in argon plasma cleaning, and that reveals we can raise the hydrophilic property by an appropriate degree of the surface cleaning. It was found that the contribution of the polar interactions to the energy of interaction at the solid-liquid interface increases with the glassy phase content of the oxide that causes reduction of the measured contact angle.[21] Figure 4 and figure 5 show the results of RSM analysis, when power is set as 100W, treating time stays in 12 minutes and the chamber pressure is controlled in 190 mtorr during the plasma treatment, and we will gain the minimum contact angle(14.50 degree). Thus the surface has the maximum hydrophilic property.

B. Properties of allylamine plasma-treated titanium plates

There is an allyamine layer with 21.4 nm thickness deposited on the titanium outside surfaces after 12 minutes plasma treatment in figure 6 that shows the results of AFM

analysis. Power, time and pressure are proportional to the contact angle of the allyamine deposition surfaces during the allylamine plasma treatment in Table¢ . The slope of the lines in Figure 7 reveals that treating time has major influence than power, and power greater than pressure within the value settle in this study. Figure 8 and figure 9 show the results of RSM analysis, when power is set as 80W, treating time stays in 22 minutes and the chamber pressure is controlled in 150 mtorr during the plasma treatment, and we will gain the mimimum contact angle(70.15 degree).

C. Amino-bonding of allylamine plasma-treated titanium plates

Table ¢¿ reveals that amine concentration depositing on the titanium is obviously direct corporation to RF power, time and negative control pressure during allylamine plasma treatment. The slope of the lines in Figure 10 reveals that treating time has major influence than power. Figure 10 also shows the higher pressure the lower depositions with amino-groups. It reveals the flow rate of allyamine per second can not increased the bonding of amino-groups efficiently. Because of the lack of vacuum degree in chamber caused that can't challenge allyamine to perform ionization efficiently. This result is like a study about hydrogen plasmas treatment. At certain discharge conditions (a.c. frequency of 24 kHz, 28kV of peak-to-peak voltage), the measured hydrogen dissociation fraction is decreased from _0.83% to _0.14% as the hydrogen pressure increases from 2.0 to 14.0 Torr.[22]

Figure 11 and figure 12 show the results of RSM analysis, when power is set as 80W, treating time stays in 22 minutes and the chamber pressure is controlled in 150 mtorr during the plasma treatment, and we will gain the maximum amine concentration 31.56nmole/cm^2.

Conclusions

The effectiveness of titanium plates with Ar and allylamine plasma treatment in producing a biocompatible layer between the plate and bone tissue and implants was investigated. It is obvious that oxygen species were implanted in plasma cleaning. It revealed that oxygen, existed in process chamber, reacted with titanium plates during cleaning process. It can be obtained the optimal parameters(100W, 12min, 190 mtorr) by ANOVA analysis about Ar plasma cleaning. Amino functional groups were found to form on the surface of the titanium plate after allylamine plasma treatment. Surfaces of the titanium were modified by allylamine plasma and the effect of applied plasma power (40 W, 60W, 80W, 100 W and 120W) on surface hydrophilicity and on the attachment of were studied. Water contact angle values of the plasma modified surfaces varied between 21.67 degrees and 62.95 degrees, demonstrating a decrease as the applied plasma power was increased. But the amount of amino functional groups deposition were reduced when the applied pressure increasing.

Reference

1. Bränemark P. I., Breine U., Adell R. Hansson B. O., "Intraosseous anchorage of dental prostheses. I Experimental studies. " Scand J Plast Reconstr Surg., 3:81, (1969)
2. Albrektsson, T., Bränemark P. I., "Osseointegrated titanium implants. Requirements for ensuring a long-lasting, direct bone-to-implant anchorage in man." Acta Orthop Scand 52(2), 155-70, (1981)
3. Linder L., Albrektsson, Branemark, P. I., T. Hansson, H. A., Ivarsson, B., Jonsson, U., Lundstrom, I. "Electron microscopic analysis of the bone-titanium interface" Acta Orthop Scand, 54: 45-52, (1983)
4. Nanci A., Zaizal S., "Comparative immunochemical analyses of the developmental expression and distribution of ameloblastin and amelogenin in rat incisors." J Histochem Cytochem 46(8), 911-34, (1998)
5. Tang L. and Eaton J. W., "Fibrin(ogen) mediates acute inflammatory responses to biomaterials", J. Exp. Med., 178, 2147-2156, (1993)
6. Walivaara B., Aronsson B. 0., Rodahl M., Lausmaa J., and Tengvall P., "Titanium with different oxides: In vitro studies of protein adsorption and contact activation", Biomaterials, 15, 827-834, (1994)
7. Dee K. C. and Bizios, R., "Mini-review: Proactive biomaterials and bone tissue engineering", Biotechnol. Bioeng., 50, 438-442, (1996)
8. Ito Y. et al., "Cell growth on immobilized cell-growth factor, n. Adhesion and growth of fibroblast cells on poly(methyl methacrylate) membrane immobilized with proteins of various kinds", Biomaterials, 13, 789-794, (1992)
9. Ito Y. et al., "Cell growth on immobilized cell-growth factor. IV. Enhancement of fibroblast cell growth by immobilized insulin and/or fibronectin", J. Biomed. Mater. Res., 27, 901-907, (1993)
10. Lin S. Q., Ito Y., and Imanishi Y., "Cell growth on immobilized cell growth factor. IX. Covalent immobilization of insulin, transferring, and collagen to enhance growth of bovine endothelial cells", J. Biomed. Mater. Res., 27 , 909-915, (1993)
11. Ito Y., Liu S. Q., Imanishi Y., "Enhancement of cell growth on growth factor-immobilized polymer film", Biomaterials, 2, 449-453, (1991)
12. Kishida et al., "Immobilization of human throbomodulin onto poly(ether urethane urea) for developing antithrobogenic blood-contacting materials", Biomaterials, 15, 848-852, (1994)
13. Kishida et al., "Immobilization of human throbomodulin on biomaterials: Evaluation of the activity of immobilized human throbomodulin", Biomaterials, 15, 1170-1174, (1994)
14. Ticha M. et al., "Immobilization of heparin on polyacrylamide derivatives", J. Chromatogr, 656B, 423-426, (1994)
15. Loh J. H., "Plasma surface modification in biomedical applications" Advanced S urface Technology Inc., Billerica, Massachusetts. Medical Device technology. Jan/Feb issues, (1999)

16. Gombotz W. R. and Hoffman, A. S. CRC Crit. Rev. Biocompat., 4, 1 (1987).
17. Baier R. E., and DePalma V. A., Calspan Corporation Advanced Technology Center, NY, Report, 176 (1970).
18. Y. Z. Yang, J. M. Tian, J. T. Tian, Z. Q. Chen, X. J. Deng, D. H. Zhang, " Preparation of graded porous titanium coatings on titanium implant materials by plasma spraying", Inc. J Biomed Mater Res, 52, 333-337, (2000)
19. Aronsson B.-O., Lausmaa J. and Kasemo B., "Glow discharge plasma treatment for surface cleaning andmodification of metallic biomaterials", Journal of Biomedical Materials Research, Vol. 35, 49–73, (1997)
20. Mekayarajjananonth T, Winkler S., "Contact angle measurement on dental implant biomaterials", J Oral Implant; vol. 25(4): 230-6, (1999)
21. Agathopoulos S, Nikolopoulos P. "Wettability and interfacial interactions in bioceramic-body-liquid systems", J Biomed Mater Res.; Apr29(4): 421-9, (1995)
22. Wei-Guo Wang, Yong Xu, Xue-Feng Yang, Wen-Chun Wang and Ai-Min Zhu, " Determination of atomic hydrogen in non-thermal hydrogen plasmas by means of molecular beam threshold ionization mass spectrometry", Rapid Commun. Mass Spectrom.; 19: 1159–1166, (2005)

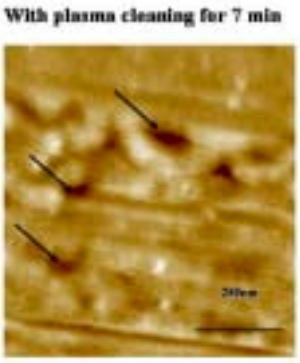

Fig. 1 AFM image of 5-min Ar plasma cleaning.

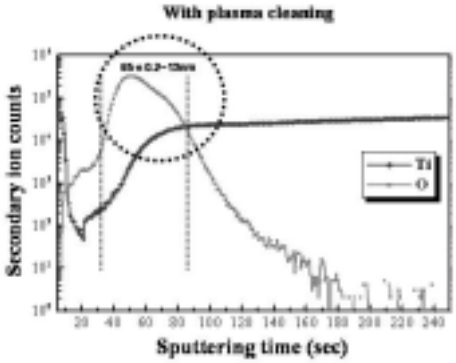

Fig. 2(a) SIMS analysis without plasma cleaning.

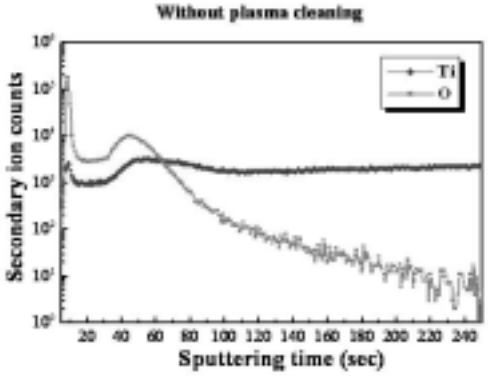

Fig. 2(b) SIMS analysis with plasma cleaning.

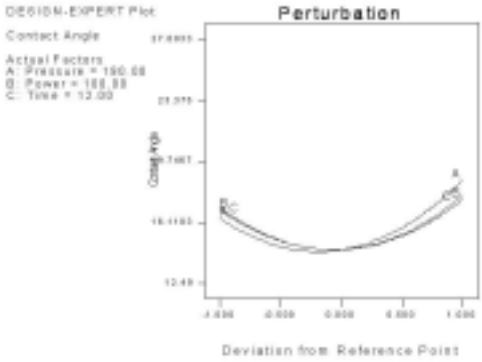

Fig. 3 Significance analysis of Ar plasma cleaning parameters.

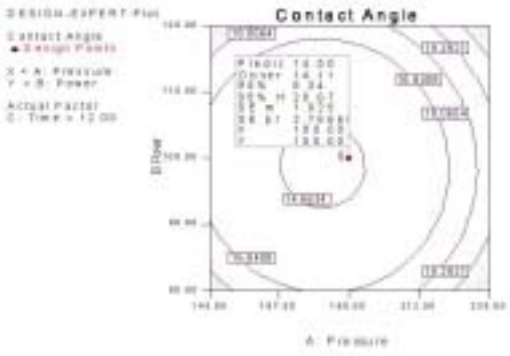

Fig. 4 The contact angle 2D response surface images of Ar plasma cleaning titanium plate.

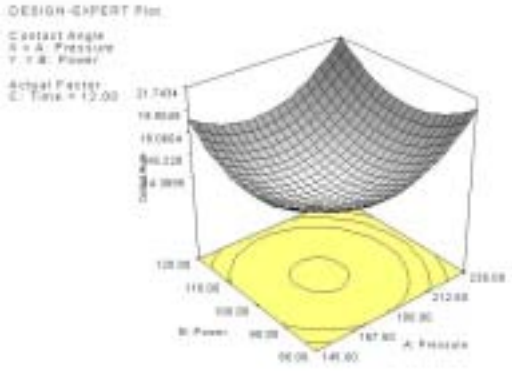

Fig. 5 The contact angle 3D response surface images of Ar plasma cleaning titanium plate.

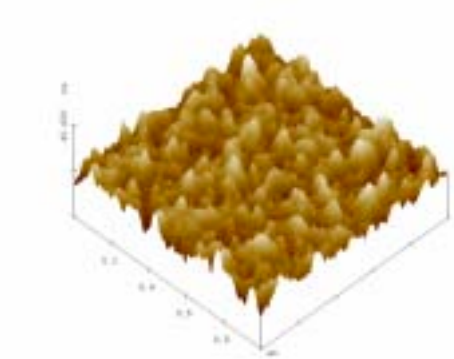

Fig. 6 AFM image of allylamine thickness after 12-min deposition.

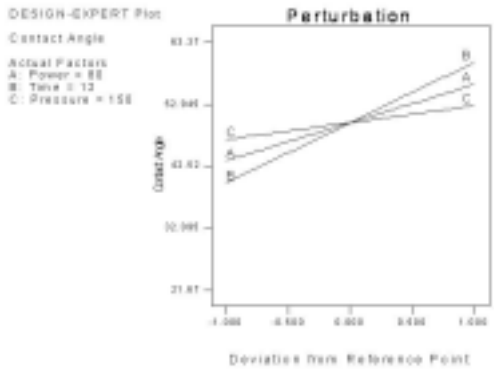

Fig. 7 Significance analysis about contact angle response of Allylamine plasma deposition parameters.

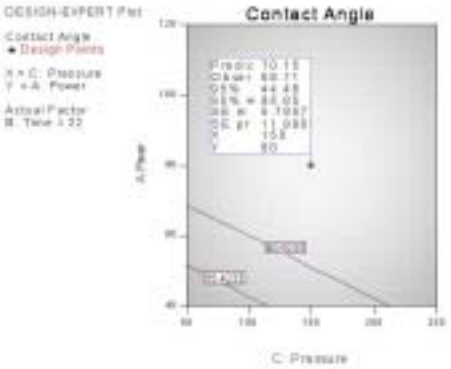

Fig. 8 The 2D contact angle response surface images of Allylamine plasma deposition.

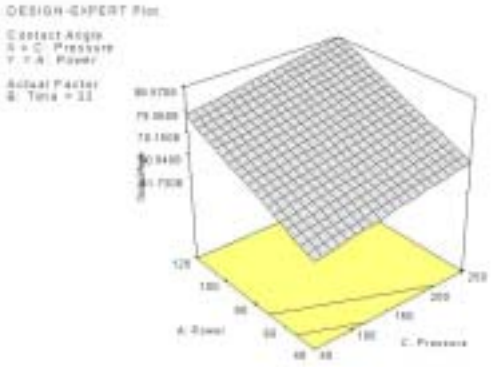

Fig. 9 The 3D contact angle response surface images of Allylamine plasma deposition.

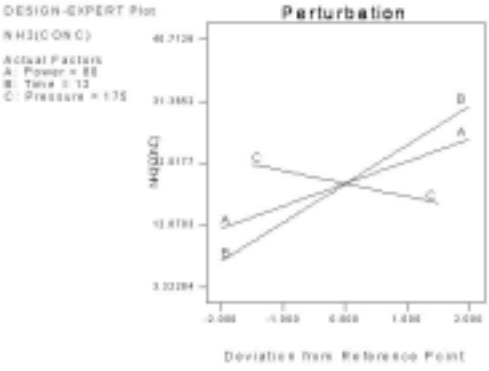

Fig. 10 Significance analysis about amine concentration response of Allylamine plasma deposition parameters.

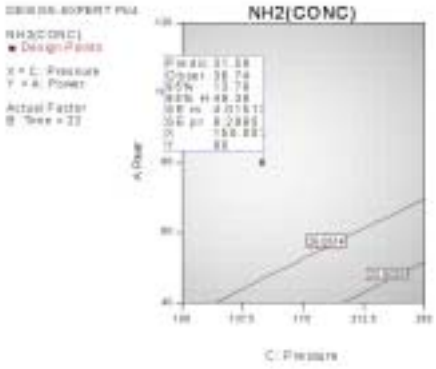

Fig.11 The amine concentration 2D response surface images of Allylamine plasma deposition.

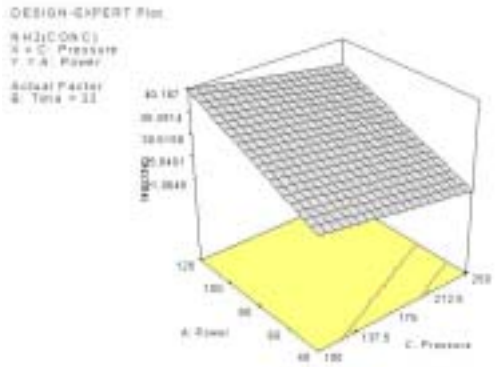

Fig. 12 The amine concentration 3D response surface images of Allylamine plasma deposition.